TT98E

Conveyor pizza oven

COMPOSITION WITH 1 BAKING DECK

OPTIONS AND ACCESSORIES
(WITH SURCHAGE)

- ❑ Support with castors, height 600mm
- ❑ GSM card for on line connection
- ❑ Infeed-outfeed balancing doors

EXTERNAL CONSTRUCTION

- ❑ Structure in folded stainless steel sheets
- ❑ Stainless steel door hinged on left hand side
- ❑ Stainless steel access flap hinged at bottom
- ❑ Tempered glass window
- ❑ Stainless steel handle equipped with handrail with perforated grips
- ❑ Extractable stainless steel conveyor belt, with continuous tensioning
- ❑ Electronic control panel on front left side

INTERNAL CONSTRUCTION

- ❑ Baking chamber in stainless steel sheets
- ❑ Top and bottom blowers in welded stainless steel sheets, extractable for cleaning
- ❑ Rock wool heat insulation, thermal joints and air space

FUNCTIONING

- ❑ Heated by armoured heating elements powered independently in adaptive mode
- ❑ Control of power PID (Proportional Supplementary Derivative) can allow the automatic regulation of energy necessary on the basis of the quantity of the batch product and the position inside the baking chamber
- ❑ Independent adjustment and control of ceiling and floor, both on the input side and the output one of the baked product, with continuous temperature detection using 4 thermocouples
- ❑ Air blowing system using 2 stainless steel fans independently motorized
- ❑ Conveyor belt with speed adjustable from 2 to 20 minutes and feed-back control at the option of belt standstill
- ❑ Programmable electronic function management
- ❑ Maximum temperature reached 320℃ (608℉)
- ❑ Independent system for additional forced air cooling of the components with low noise

STANDARD EQUIPMENT

- ❑ Back lighted liquid crystal graphic display
- ❑ 20 customisable programs
- ❑ Weekly Timer with the possibility to program two lightings and two power off every day
- ❑ Energy savings device
- ❑ Auto test with display of error message
- ❑ Set up to allow on line connection via GSM card
- ❑ USB slot for data reading / programs DATA-FEED® SYSTEM
- ❑ Double independent maximum temperature and minimum blow pressure safety devices
- ❑ Pizza rest

MORETTI FORNI S.P.A.
www.morettiforni.com
info@morettiforni.com
Via A.Meucci, 4 - 61037 Mondolfo (PU) ITALIA
Tel. +39.0721.96161 - Fax +39.0721.9616299

TT98E 1 DECK

(assembled with support height 600mm)

TOP VIEW

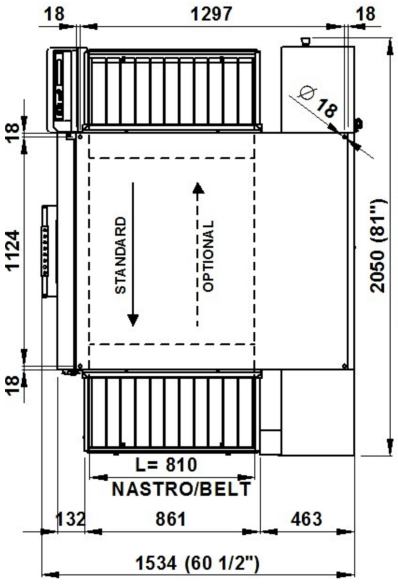

REAR VIEW

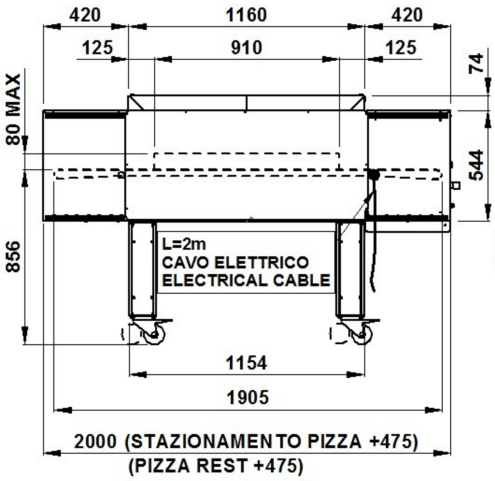

RIGHT SIDE VIEW

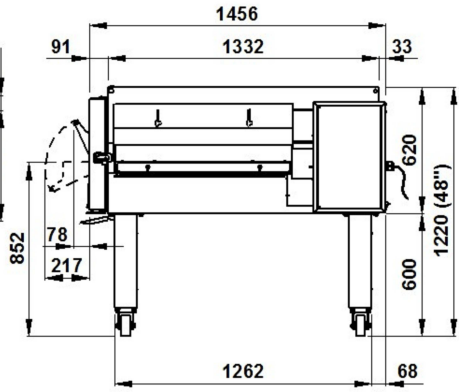

Note: The dimensions indicated in the views are in millimeters.

SPECIFICATIONS

The appliance comprises one baking element and an optional support . Baking takes place by passing the product between two adjustable flows of hot air, which allow perfect distribution of heat throughout the chamber, making this oven particularly suitable to bake pizza and other alimentary products. The regulation of power is automatic in basis of the load , the ceiling and floor resistors, both on the input side and the output one of the baked product, are controlled independently, and the belt speed is reverse controlled and adjustable. Stainless steel access flap hinged at bottom with tempered glass window. Efficiently insulated and isolated, the outer surfaces are further cooled by a at very low noise flow of air. The support comprises stainless steel legs on swivel castors. The maximum temperature in the baking chamber is 320℃ (608℉).

All the data give below refers to the configuration with 1 baking deck

DIMENSIONS

External height	1220mm
External depth	1534mm
External width	2050mm
Weight (excl.supp)	358kg
Tot. baking surface	0,74m^2

TOTAL BAKING CAPACITY

*N° pizzas/hour

Pizza diameter 330mm	N°125
Pizza diameter 450mm	N°48

SHIPPING INFORMATION

Dimensions of packed oven

Height	790mm
Depth	1725mm
Width	2152mm
Weight	(358+30)kg

FEEDING AND POWER

Standard feeding
A.C. V400 3N
Feeding on request
A.C. V230 3

Frequency	50Hz
Optional	60Hz
Max power	21,8kW
*Medium cons/hour	8,8kWh

Connecting cable
type H07RN-F
5x10mm^2 (V400 3N)
4x16mm^2 (V230 3)

***This value is subject to variation according to the way in which the equipment is used**

- NOTE: MORETTI FORNI S.P.A. reserves the right to modify the characteristics of the products illustrated in this publication without prior notice